International Research Journal in Global Engineering and Sciences. (IRJGES)
ISSN : 2456-172X | Vol. 6, No. 1, March, 2021 – May,2021 | Pages 23-29

A Study and Certain Grid-Tie Inverter Based Micro Grid

Rajesh Thota[1], B.Nagaraju[2], Ch. Usha Sri[3], G.Punnam Chander[4], K.Srinivasan[5]

[1, 2, 3, 4] *Assistant Professor, Department of Electrical and Electronics Engineering, Vaagdevi College of Engineering, Warangal, Telangana-506005, India.*

[5] *Associate Professor, Department of Electrical and Electronics Engineering, Vaagdevi College of Engineering, Warangal, Telangana-506005, India.*

Abstract:
Grid-tie inverters play a crucial role in microgrid systems by converting DC electricity into AC power for integration into existing electrical grids. This paper presents the design and implementation of a grid-tie inverter capable of managing both actual and reactive power flows, facilitating the connection of renewable resources such as solar arrays, wind turbines, and energy storage systems to the AC grid within a laboratory microgrid setup. The coordination of various operations within the grid-tie inverter is handled by the AVR32UC3A0512 microcontroller powering the Atmel EVK1100. The EVK1100 communicates with Rockwell PLCs via Ethernet, forming part of the microgrid system's communication, control, and sensor network.

Index Terms: Inverter, grid-tie inverter, microgrid

I. Introduction

Environmental concerns, including climate change and global warming, have spurred the demand for incorporating dispersed renewable energy sources into future electrical grids. Energy policies and regulations, along with the push for environmentally friendly electricity generation and storage, are reshaping the characteristics of electricity networks and supply. Microgrids present a unique opportunity to integrate renewable resources into the distribution system. Decentralized versions of centralized electrical systems, microgrids supply power closer to the point of demand through distributed generators on a smaller scale and renewable energy sources like solar panels, wind turbines, and energy storage systems. Microgrids not only offer the potential to reduce environmental impacts by leveraging renewable resources more extensively but also to enhance power quality, network efficiency, reliability, and economics.

Power conversion from AC to DC is a critical aspect of microgrid systems. While the traditional electrical grid relies on the generation, transmission, and distribution of AC power, renewable energy sources typically produce DC electricity. Thus, to connect renewable energy sources to the conventional AC power grid, DC power must be converted to AC power. Similarly, for energy storage in batteries, grid AC power must be converted to DC. An "inverter" facilitates the conversion of DC power to AC power, while a "rectifier" converts AC power back into DC power.

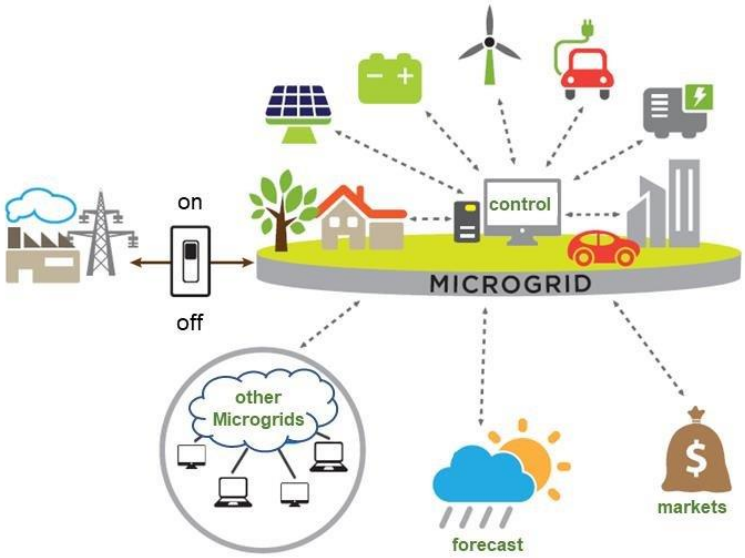

Fig 1: Microgrid

A microgrid is a group of interconnected loads and distributed energy resources that acts as a single controllable entity with respect to the grid. It can connect and disconnect from the grid to operate in grid-connected or island mode. Microgrids can improve customer reliability and resilience to grid disturbances. A microgrid is a small-scale power grid that can operate independently or collaboratively with other small power grids. The practice of using microgrids is known as distributed, dispersed, decentralized, district, or embedded energy production.

Any small-scale, localized power station that has its own generation and storage resources and definable boundaries can be considered a microgrid. If the microgrid can be integrated with the area's main power grid, it is often referred to as a hybrid microgrid.

Microgrids are typically supported by generators or renewable wind and solar energy resources and are often used to provide backup power or supplement the main power grid during periods of heavy demand. A microgrid strategy that integrates local wind or solar resources can provide redundancy for essential services and make the main grid less susceptible to localized disaster.

Buildings equipped with electric generation capability and a microgrid is a group of interconnected loads and distributed energy resources that acts as a single controllable entity with respect to the grid. It can connect and disconnect from the grid to operate in grid-connected or island mode. Microgrids can improve customer reliability and resilience to grid disturbances.

Advanced microgrids enable local power generation assets—including traditional generators, renewables, and storage—to keep the local grid running even when the larger grid experiences interruptions or, for remote areas, where there is no connection to the larger grid. In addition, advanced microgrids allow local assets to work together to save costs, extend the duration of energy supplies, and produce revenue via market participation.

An inverter is an electrical device that changes direct current (DC) to alternating current (AC). By using the proper transformers, switching, and control circuits, the AC signal can be produced at any desired voltage and frequency. The power circuit schematic for a single-phase bridge voltage source inverter is displayed in Fig. 2. The DC source's output is converted into an

AC waveform using four switches spread across two legs. Any semiconductor switch, such as an IGBT, MOSFET, or BJT, can be used. Feedback diodes are diodes connected in parallel to switches. When the main switch is off, they return energy to the DC source in the case of inductive loads. This unique type of converter joins an AC network with a renewable resource.

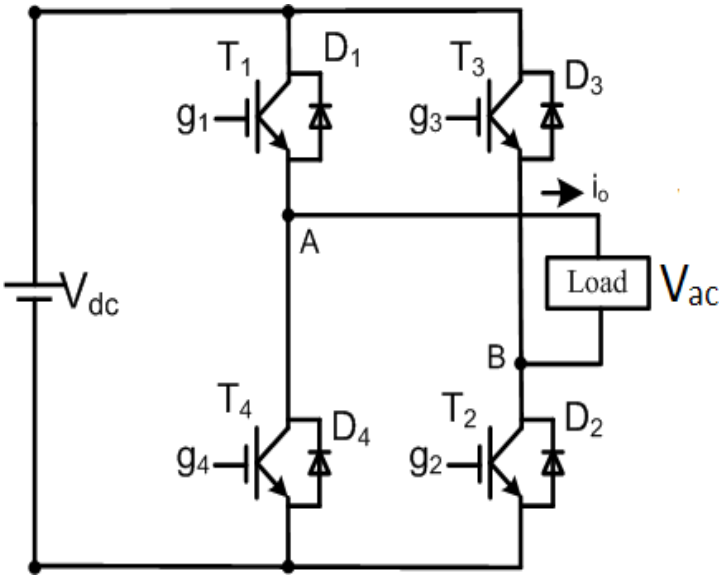

Fig. 2: Power Circuit Diagram of an IGBT-Based Single-Phase Full-Bridge Inverter

II. Grid-Tie Inverters

A unique type of inverter known as a "grid-tie inverter" (GTI) converts DC electricity into AC power for connection to an existing electrical grid. Renewable energy sources like solar panels and wind turbines produce DC power, which GTIs are commonly used to convert into AC power for use in homes and businesses.

In this study, laboratory-scale sources are connected to an 18 V RMS AC network via the GTI (refer to [2]). Commercial GTIs were not utilized due to their inability to interface directly with the PLCs in our system, their typical design for higher voltage systems (e.g., 120 V RMS AC), and their inability to manage real/reactive power (four quadrant) output. We require a GTI capable of controlling active and reactive power flowing into and out of the network in both directions. This capability will enable us to control power quality as well as the dynamic and transient characteristics of voltage, frequency, and power angle. Additionally, the GTI will utilize Ethernet for connection with the PLCs to send and receive commands and necessary data. Figure 2 illustrates the general block diagram of the GTI.

The primary component of the GTI in Fig. 3 is the full-bridge inverter, consisting of four semiconductor switches. The inverter includes a driver section that supplies the switching pulses to the power switches. A controller section, typically an electronic circuit, generates the appropriate commands/pulses to control the inverter effectively. In this setup, a microcontroller is employed to control the GTI system and perform other tasks such as sampling the grid voltage and communicating with higher-level controllers in the network.

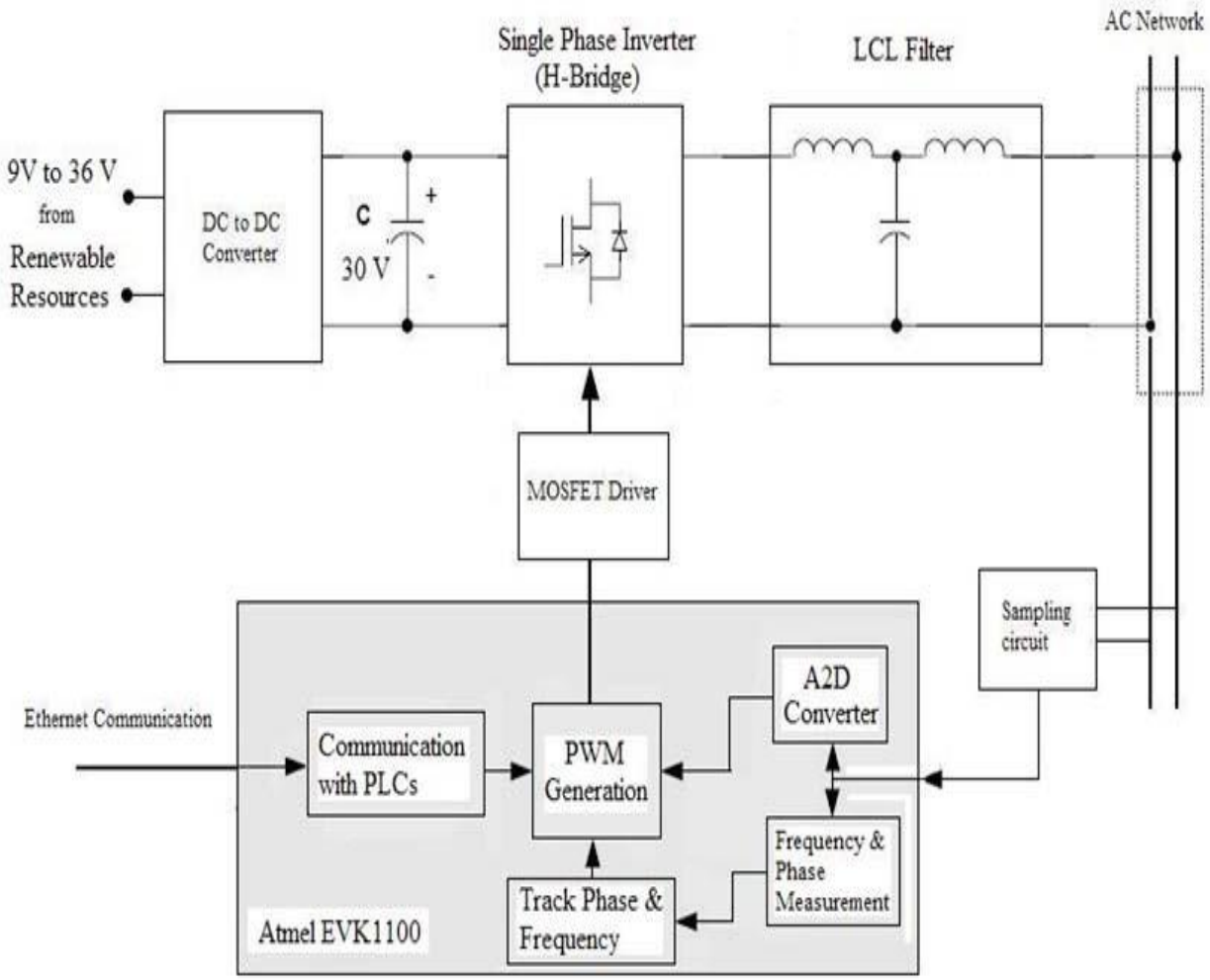

Fig. 3: Block Diagram of the Grid Tie Inverter

The inverter receives a constant 24V DC voltage from the DC-DC converter, which transforms non-constant voltage from renewable resources. The voltage output from the full-bridge inverter is amplified by the transformer. To create a pure AC signal, a low pass filter is employed to eliminate the high-frequency signals created by the switching pulses from the output waveform. The amplitude, frequency, and phase of the waveform output should all be synchronized with the grid, as the GTI's output is linked to it. To achieve the proper output waveforms, the software samples the grid voltage for this purpose.

The GTI is equipped with an Ethernet connection that facilitates communication between the PLCs and the user, allowing both receiving and sending orders. The following section provides more information as well as the actual circuit architecture for each block.

Control and protection pose challenges to microgrids, as all ancillary services for system stabilization must be generated within the microgrid, and low short-circuit levels can be challenging for selective operation of the protection systems. Additionally, providing multiple useful energy needs, such as heating and cooling besides electricity, is an important feature, as it

allows energy carrier substitution and increased energy efficiency due to waste heat utilization for heating, domestic hot water, and cooling purposes. Community microgrids can serve thousands of customers and support the penetration of local energy (electricity, heating, and cooling).

In a community microgrid, some houses may have renewable sources that can supply their demand as well as that of their neighbors within the same community. The community microgrid may also have centralized or several distributed energy storages. Such microgrids can be in the form of an AC and DC microgrid coupled together through a bidirectional power electronic converter.

The circuit used to sample the grid voltage and condition the signal for input to the microcontroller employs a Schmitt Trigger to make a square wave signal from the sine wave, which is then fed into the timer of the microcontroller. The timer utilizes this square wave signal to measure the frequency of the sine wave (network voltage) and to determine the zero-crossing times of the sine wave so that the output signal can be generated with the correct phase in relationship to the phase of the network signal. Pulse synchronizing and isolation circuits are used between the microcontroller and MOSFET drivers. The Op-Amps and transistors convert the two PWM signals coming from the microcontroller into four signals going to the MOSFET drivers. Opt couplers 6N137 are used to electrically isolate the electronic low voltage circuits from the power electronic section that includes the MOSFETs and drivers that are higher voltage.

The hardware and software designs of the GTI are described in this section. The complete driver and inverter circuitry, including the low pass filter, are displayed. N-channel, enhancement MOSFET switches with rapid switching times (22-second rise times and 25-second fall times) rated for 100V and 17A make up the entire H-bridge inverter.

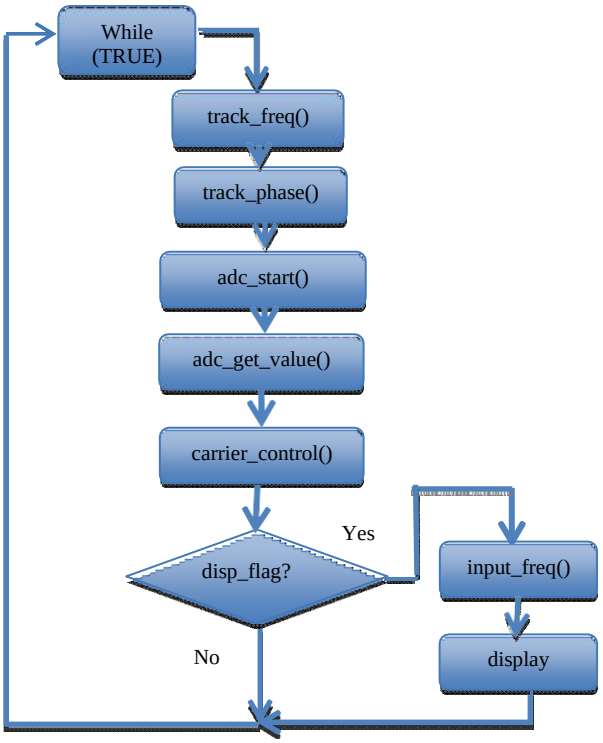

Fig. 4: Flow Chart of Main Polling Loop

This switch's super low resistance (90 mΩ) contributes to its increased efficiency and less power dissipation. The microcontroller's switching pulses are applied to the MOSFET switches via the MOSFET driver IR2110. In a synchronous buck or half-bridge configuration, the high side and low side N-Channel MOSFETs can be driven by the high voltage half-bridge gate driver IR2110.
A programming resistor can be used to independently delay each output's rising edge. The LC low pass filter is comprised of capacitor C14 and inductors L5 and L6.

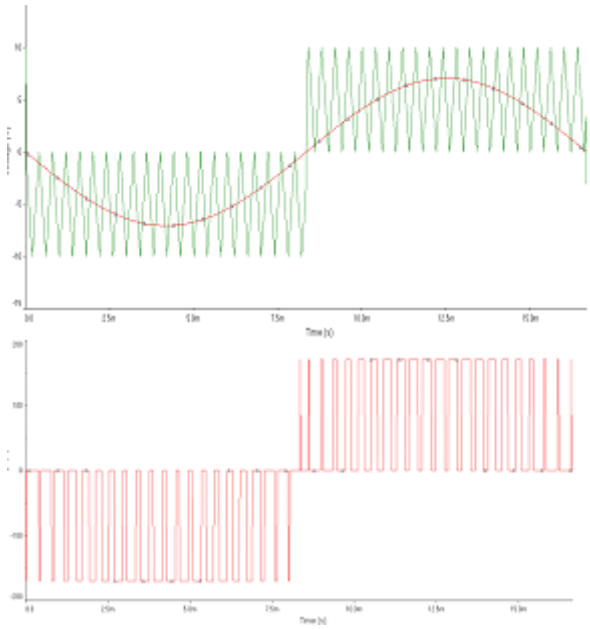

Fig. 5: 3-Level PWM Input and Output Waveforms

In the H-Bridge's three-level PWM operation, the high and low sides of the circuit switch at the PWM control frequency (50 kHz) and sine wave frequency (60 Hz), respectively. This approach only activates a high-side MOSFET on one half of the H-bridge when the opposing low-side is on, distinguishing it from other designs. The outcome is higher resolution waveforms, reduced harmonic distortion, and increased efficiency due to fewer switching occurrences.
The GTI is controlled by the EVK1100, which tracks the phase and frequency of the grid waveform and generates output signals to drive the low and high-side switches of the H-bridge. The software utilizes a hybrid polling structure, executing five functions every cycle through the main loop. A separate function to update the display status is executed when a flag is raised, occurring less frequently as it does not have high priority in operating the inverter. The microprocessor operates at a clock speed of 48 MHz to achieve high performance, ensuring the inverter output closely matches that of the grid.
The AC grid voltage waveform's range is reduced to 0 – 3.26 V to enable sampling for the microprocessor's A/D channels. A Schmitt Trigger creates a square wave from the downscaled AC signal, routed into the microprocessor's timer/counter channel (T/C in). The timer counter input and output channels run off the same clock.

The track frequency function sets the duty cycle and period of a timer counter output channel (T/C out) to match that of the grid. The track phase function synchronizes the T/C in and T/C out channels by reading their counter values and computing the phase difference.
The A/D converter samples the scaled grid voltage, used by the carrier control function to set the duty cycle of a 50 kHz PWM signal driving the high-side switches of the H-bridge. The main polling loop observes the status of a flag set at a rate of 1 Hz, leading the software into a different loop when recognized.
Ultimately, the software manages a solid-state relay connecting the inverter to the grid, closing the switch when the inverter output synchronizes with the grid. The GTI consists of two boards, transformers, and connections, with one board comprising MOSFET switches and drivers, DC regulators, sampling circuitry, optocouplers, and other devices, while the other board hosts the Atmel EVK1100 with an AVR32 UC3A0512 microcontroller, LCD display, and additional features. The transformers are used for voltage conversion and isolation. The output sine waveform, along with the grid sine waveform of the GTI, is depicted, noting that a better filter structure may be necessary in the final design to handle high-frequency noise.

Conclusion

This study has demonstrated the design and implementation of a grid-tie inverter (GTI) intended for use in a grid demonstration system [1]. The GTI ensures synchronization of the grid's voltage signal with the frequency, amplitude, and phase of its output signal. Powered by an Atmel microcontroller, the GTI is capable of generating an AC waveform synchronized with the grid, as evidenced by the results presented. Future software updates are envisioned to enhance the capabilities of the inverter, enabling control over its output frequency as well as its real and reactive power output. These advancements will further optimize the performance and functionality of the grid-tie inverter, contributing to its effectiveness in grid-connected applications.

REFERENCES

[1] D.H. Moore, H.M. Abdar, A. Chakraverty, J.M. Murray, K.A. Loparo, "Grid of the Future Laboratory Demonstration System," Submitted to Energy Tech 2012 Conference.
[2] Arin Chakraverty, "Design and Implementation of a Grid-Tie Inverter," M.S. Graduation Report, Case Western Reserve University, 2011.
[3] Y. Beck, B. Bishara, D. Medini, "Connecting an Alternative Energy Source to the Power Grid by a DSP Controlled DC/AC Inverter," Inaugural IEEE PES 2005 Conference and Exposition in Africa Durban, South Africa, 11-15 July 2005.
[4] N. Aphiratsakun, S. R. Bhaganagarapu, K. Techakittiroj, "Implementation of a Single-phase Unipolar Inverter Using DSP TMS320F241," AU J.T. 8(4): 191-195 , Apr. 2005.
[5] T. K. Kwang, S. Masri, "Single Phase Grid Tie Inverter for Photovoltaic Application," IEEE Conference on Sustainable Utilization and Development in Engineering and Technology, Nov 2010.